RevNo	Revision note	Date	Signature	Checked
00	Sketch Only	6/25/14	Teresa	Simon

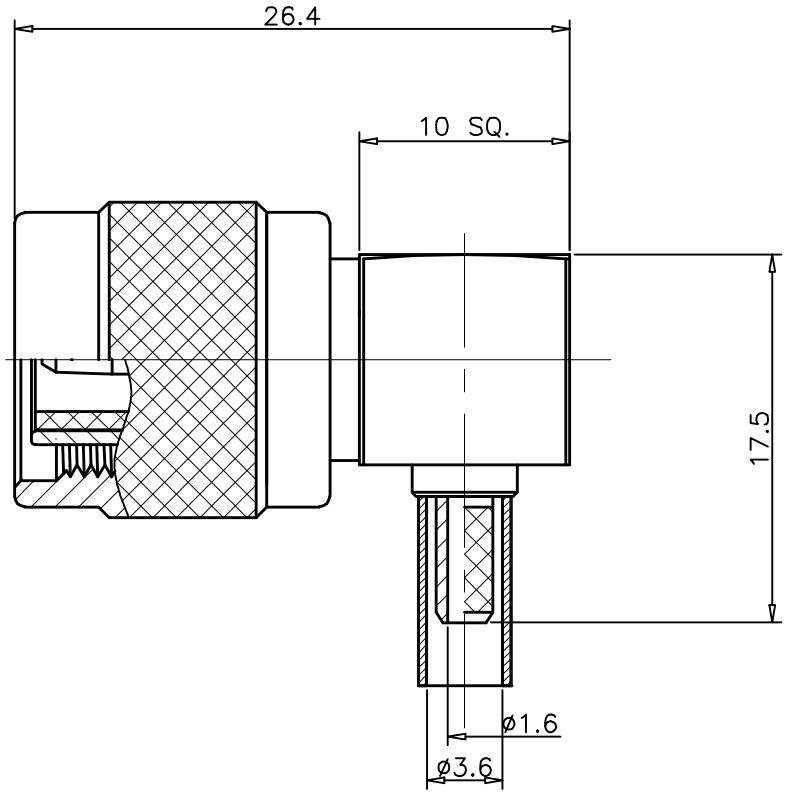

Interface Per: MIL-C-39012, IEC 60169-17

Material & Finishing:
1. Center condutor: Brass, Gold Plating
2. Insulators: PTFE
3. Gasket: Silicone Rubber
4. Body & Other Metal: Brass, Nickel Plating
5. Coupling Nut: Brass, Nickel Plating
6. Snap Ring: Phosphor Bronze

RoHS Compliant.

ALL DIMENSIONS ARE IN MILLIMETERS AND [INCHES]

KERUI ELECTRONIC CO;LTD

THESE DRAWING & SPEC. ARE THE PROPERTY OF KERUI ELECTRONIC CO;LTD AND SHALL NOT BE REPRODUCED, OR COPIED OR USED AS THE BASIS FOR THE MANUFACTURE OR SALE OF APPARATUS OR DEVICES WITHOUT THEIR EXPRESS WRITTEN CONSENT.

UNLESS OTHERWISE NOTED ALL SURFACES FINISHED TO 64/ MAX.

ALL TOLERANCES ARE:

DECIMALS	FRACTIONS	ANGLES
x ± 1.0	±1/64	x° ± 1°
x.x ± 0.5		x°x' ± 0.5'
x.xx ± 0.1		

Title: TNC male right angle crimp for RG316D cable

Drawn by	Ckd by	Appd by	Date
Teresa	Simon	Richard	6/25/2014

Scale 3:1 | Sheet 1 of 1 | 50 1011 116 01